In-line Process Photometry - Application Note

Wine Processing

optek-Danulat, Inc.

Germantown Technology Park · N118 W18748 Bunsen Drive · Germantown, WI 53022 · USA
Phone: (800) 371-4288 · Fax: (262) 437-3699
E-mail: Info@optek.com · Web Site: http://www.optek.com

Wine Processing Applications

In-Line Process Photometry

Who is optek?

The Process Photometry World Leader

We are the world's largest producer of in-line photometry. *optek* is focused purely to the development, production and marketing of high performance UV-VIS-NIR Absorption and Scattered-Light process photometry providing the latest cost-saving solutions and optimized process control to virtually every process.

Founded in Essen, Germany in 1984, *optek* Worldwide is currently comprised of three main operations in Germany, The United States and The Netherlands with an expansive network of regional offices, local distributors and representatives spanning the globe. *optek* employs the very best team of qualified, customer-oriented personnel. Our technical support, administrative staff, regional managers and market specialists are all experienced engineers, chemists and professionals committed to providing superior advice and customer support both before and after the sale. We have an exceptional understanding of each process and the requirements of our clients.

optek Headquarters - Essen, Germany

What is In-line Photometry?

Real-Time Process Measurement and Control

optek's in-line process absorption and scattered-light photometers utilize principals based on the interaction of light with process fluids or gases. These unique instruments provide precise, real-time process stream analyses when installed at strategic locations within the plant in pipelines, fermenters, reactors, tanks and vessels. Typical applications include process measurements of solids, liquids or gases to detect or measure constituent concentrations, trace contaminants, interfaces between products, quality assurance analyses and a spectrum of other beneficial measurements, all in real-time with impressive precision and reliability.

optek photometric analyzers consist of three main assemblies: 1.) The in-line flow-thru or insertion probe sensor bodies equipped with light source and detector assemblies. 2.) The transmitter (converter) and 3.) Special high-grade shielded cable set interconnecting the sensor to the converter. Within the sensor, light from the light source is focused and sent into the stream. The emerging light that has penetrated the process medium is precisely filtered then measured on the opposing side by high-precision absorption or scatter-light detectors. The resultant photocurrents from the process sensor are precisely amplified, analyzed and converted by the transmitter and then sent to the plant's process control system providing real-time measurements in virtually any unit of measure.

What Makes optek Number 1 in the Market?

- *Proven Experience and Process Know-how*
- *Superior Technology and In-Line Performance*
- *Sensors and Systems Designed Purely for Process Use*
- *Extremely Tough, Reliable and Low Maintenance*
- *Unbeatable Warranties, Service & 24-hour Support*

How can optek In-line Photometry benefit your process?

Innovative, Proven Cost-saving Solutions

Providing solid solutions to complex problems has been both the challenge and cornerstone of our business. With the experience of thousands of installations worldwide, an extensive range of innovative photometric products, and large local inventories, we offer affordable solutions efficiently and confidently to meet the exacting needs of our clients and their processes. With *optek*, you can be assured that you're on your way to controlling product quality, reducing production costs, optimizing yields, and meeting standards - all in the most reliable and cost-effective manner.

Wine Processing Applications

In-Line Process Photometry

optek Advanced Process Photometry

A spectrum of configurations to meet all process requirements and budgets

Sensors

Factory Mutual

Sensor Designs:	Welded Industrial, Solid Block Ultra-Sanitary 3-A designs for CIP/SIP, Insertion Probes
Pressures:	0 mbar to 500 bar (0.15 to 7,250 psig)
Temperatures:	–10°C to 260°C (–4°F to 500°F)
Window Materials:	Pyrex® and Sapphire for superior light transfer and chemical resistance
Line Sizes:	Metric DN 5 to 300, ¼" to 12" OD / IPS
Process Connection:	DIN & ANSI Flanges, Sanitary Tri-Clamp, Female NPT, Butt Weld, Varivent, others
Wetted Materials:	316Ti SS, 316L SS, Titanium, Hastelloy, TFMC, Nickel, Kynar, CPVC, many others

Flanged and NPT

Ultra-Sanitary

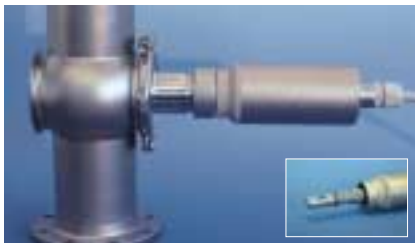

Insertion Probes

Converters

C4000 Series: Advanced microprocessor-based converters able to control multiple sensors with data-logging, remote control and other superior features and functions.

X16 Series: Single and dual channel Digital / Analog converters with resolution enhancement, signal response selection and other added features.

X56 Series: Rack mount digital display converter with simplistic functions for cost -conscience applications.

X26 Series: Cost-effective DIN-rail mount converters for applications that do not require a local display or extra features.

Markets Served:

- Chemical
- Metals and Mining
- Petroleum
- Biotechnology
- Pharmaceuticals
- Semiconductor
- Brewing and Wineries
- Distilleries
- Fruit Juice
- Soft Drinks
- Dairy Processing
- Fermentation Sciences
- Edible Oils
- Sweeteners
- Pulp & Paper
- Textiles
- Water & Wastes
- Blood Sciences
- many others...

Validation

NIST-traceable Validation:

Modular adapters and NIST-traceable validation filters for precision calibration with ease and total confidence.

Rapid-Cal:

Compact and ingenious Rapid-Cal fixtures to perform liquid calibrations quickly and accurately.

optek-Danulat, Inc. Ph: (800) 371-4288 Fx: (262) 437-3699 Info@optek.com http://www.optek.com

Process Overview

A spectrum of applications to maximize process control and yields

1. Juice / Yeast Concentration Control – NIR Probe
2. Decanter / Centrifuge Feed Control
3. Centrate Clarity Monitoring and Desludge Control
4. Polishing Filter Feed Control / Filterability Monitoring
5. Filter Aid Dosing Control
6. Pressure Leaf Filter - filtrate quality
7. Plate Filter - final filtrate quality
8. Blending and Adjusting Control
9. Color quality assurance
10. Final Filtration Control
11. CIP Return Clarity / Re-Use (Typical for all Sanitary Processes)
12. Wastewater / BOD Loading (Typical for all Sanitary Processes)

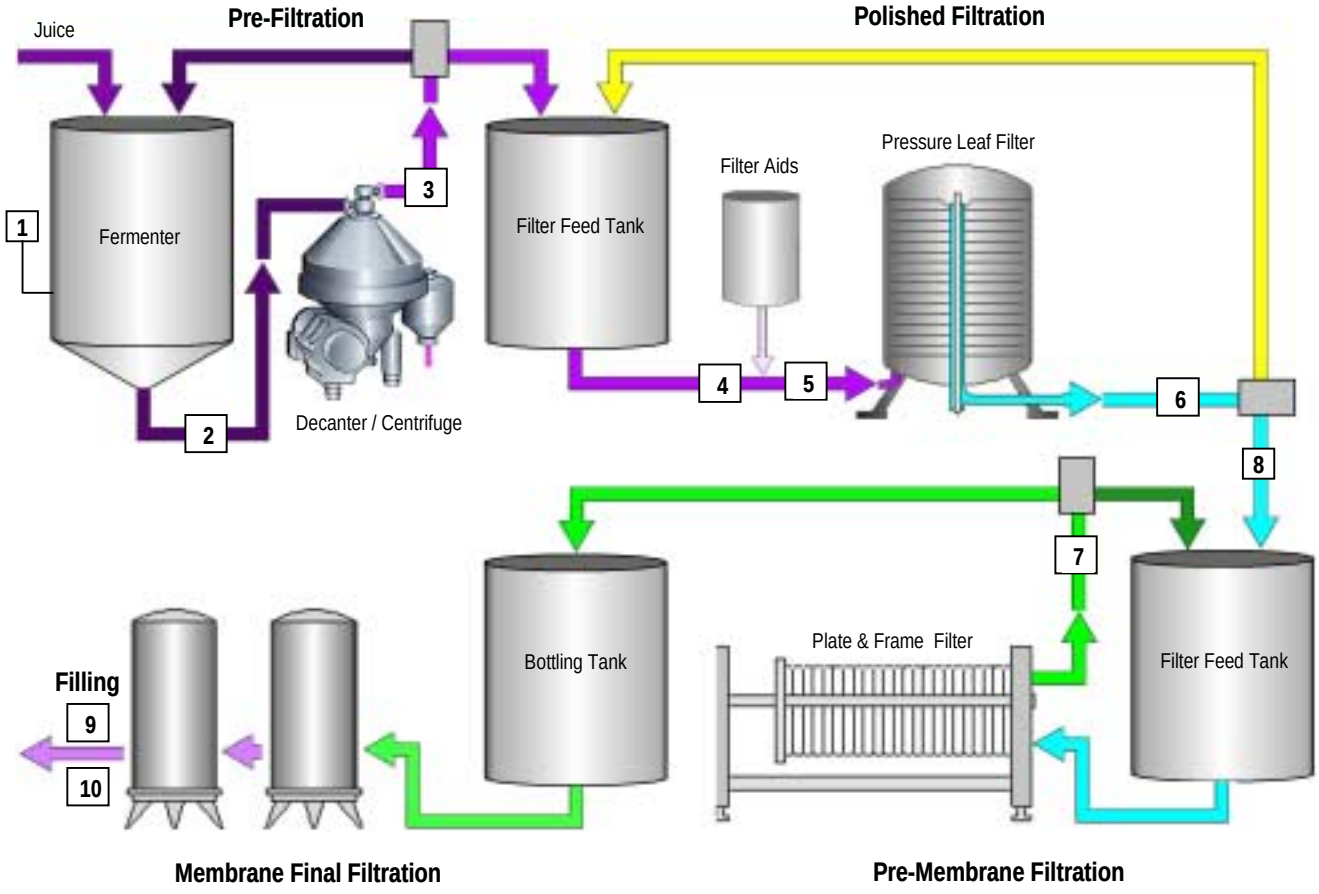

Precise Interface Detection

Save thousands by reducing product and water losses

Reduce Losses! A NIR absorption interface detection unit is installed at strategic points within the process where it is desirable to measure the exact interface on push-outs or product changeovers. Placement is typically in filling lines, or any place product is transferred with water or another product for pushout.

Each product has a unique absorption signature, whether you are measuring variations in color, such as yellowness or redness or variations in turbidity. Changes in the absorption value, as seen by the instrument, indicate a change in product. This absorption change is then transmitted by a 4-20 mA signal or 2 contact outputs to initiate process changes, monitor the process, or indicate warnings to the control room or operator to initiate manual process changes.

For wine/water product changes, the instrument is capable of detecting less than 1% by volume additional water, making for instantaneous detection and process change. In many cases detection of product changes can be improved by over 40 seconds, considerably reducing product losses compared to timer-based control or changes based on visual detection.

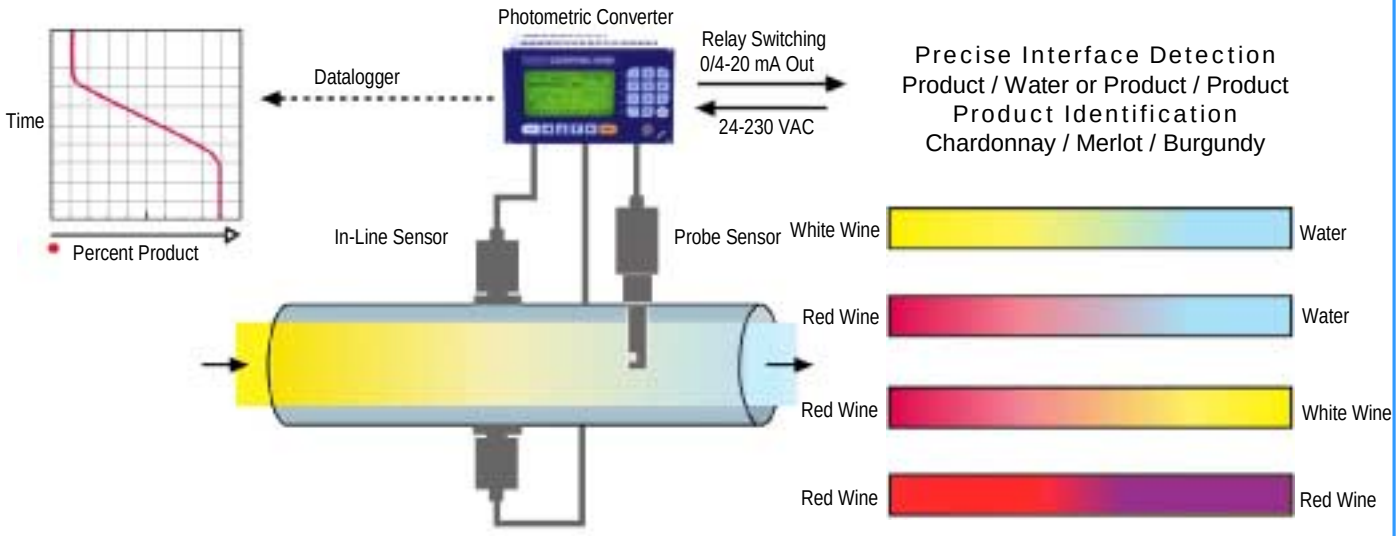

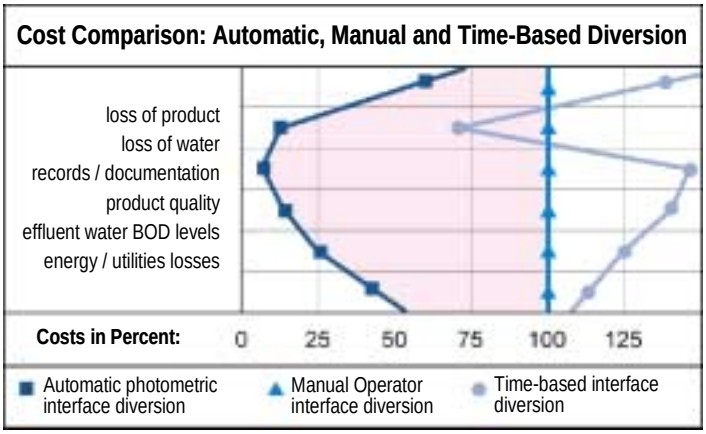

Product Recovery

Reduce losses and effluent loading

CIP Return Water Clarity Monitoring - Save money through reduced water usage and product recovery!

The quality of clean-in-place solutions can be monitored in-line with *optek* process photometers. This is accomplished by monitoring the concentration of constituents in the water and detecting acceptable/ unacceptable contamination levels for determination of recovered pre-rinse. By strategically installing *optek* photometric sensors at CIP return points, the CIP return can automatically be diverted to a waste holding tank, waste treatment, or held for subsequent CIP pre-rinse.

This method not only reduces valuable product from going down the drain, it saves countless gallons of water for CIP prerinse, and greatly reduces the BOD levels of drain water being sent to the municipal/plant effluent system thereby reducing losses and the unexpected expense incurred by municipal excess BOD fines.

Wastewater Monitoring – Avoid treatment plant upsets, high disposal fees and municipal BOD fines

Waste streams can be monitored for trace product contamination to determine lost product levels and organic loading levels for wastewater treatment either on site or at the municipality. High BOD streams can be diverted to avoid costly disposal fees. Immediate identification of unacceptable levels of organic loading enables problems to be addressed quickly and inexpensively.

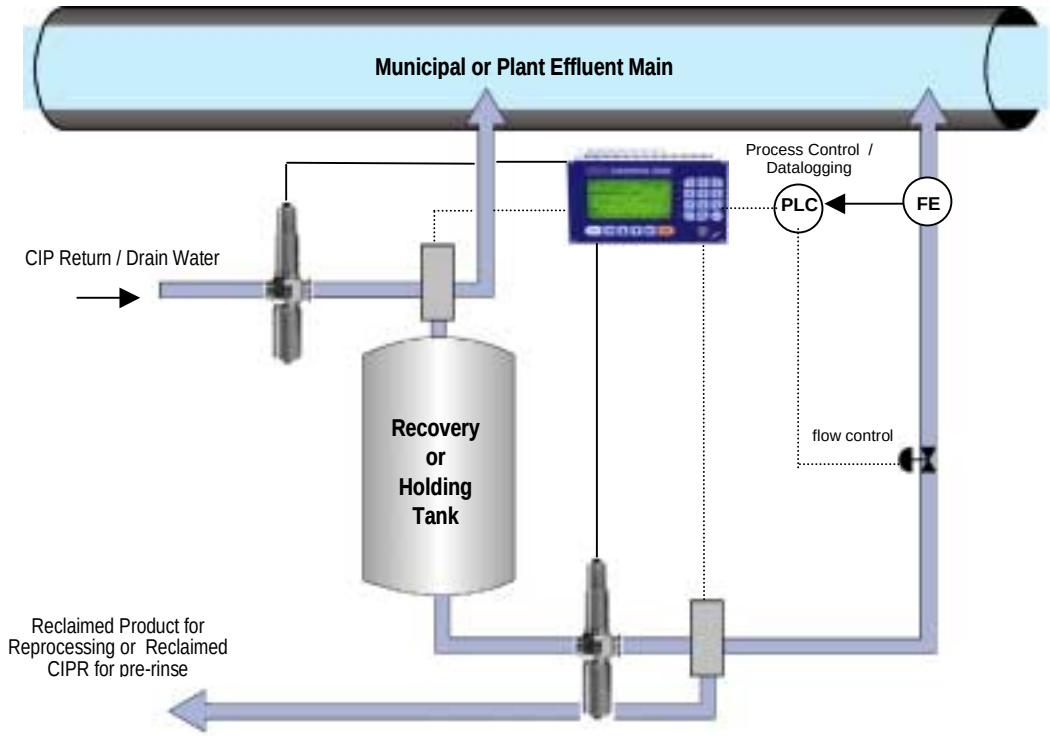

Benefits:

- *Saves money through reduced water usage*
- *Reduce product losses*
- *Avoids excessive BOD fines and expenses*
- *Recovers water for CIP pre-rinse operations*
- *Avoids treatment plant upsets*

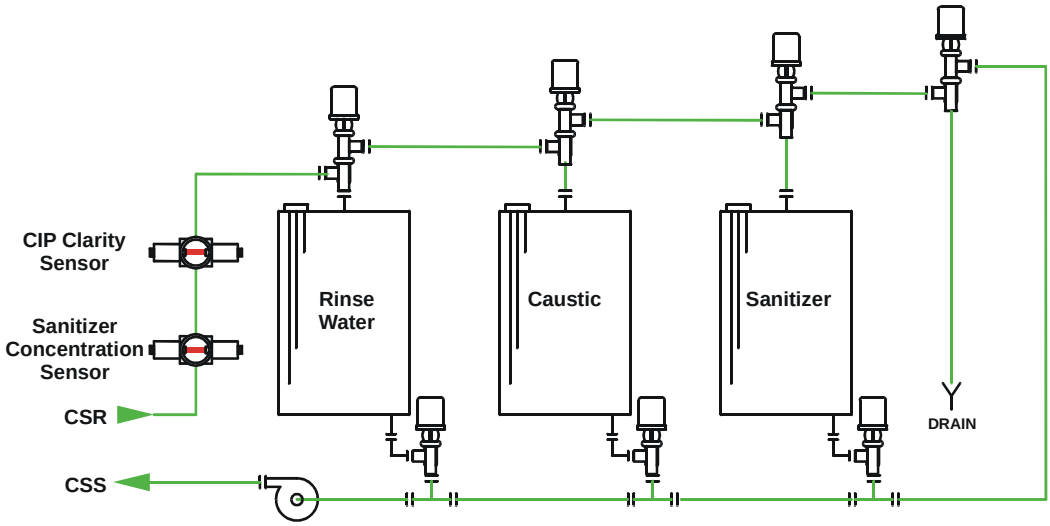

Typical CIP System(s)

CIP Return Water Clarity Monitoring

Save money through reduced water use and enhanced product recovery!

The condition of clean-in-place solutions can be monitored to measure the soiling of the pre-rinse, detecting acceptable/unacceptable contamination levels for determination of recovered pre-rinse. Through use of an *optek* NIR absorption sensor at the CIP return points, the CIP return can automatically be sent to a waste holding tank, wastewater treatment or held for a subsequent CIP pre-rinse. This not only save countless gallons of water from being sent to drain, it also greatly reduces BOD levels of drain water being sent to the municipal / plant effluent system reducing losses and expenses for municipal waste citations.

Sanitizer Concentration Monitoring (ClO2, Iodine, Peracetic Acid)

Save money through reduced water use and efficient use of chemicals!

Chemical concentration has always been a difficult measurement using traditional conductivity sensors. Changes in pH and temperature, or the presence of unexpected compounds all can have an effect on conductivity devices. This may affect response times as well. To compensate for these issues, plant operators often overdose chemicals to ensure adequate sterilization, and then extend line flushes to insure its removal.

Optek dual-channel absorption sensors monitor exact concentrations using a chemicals own unique absorption signature. These sensors are also compensated to eliminate any influence from turbidity or the presence of other compounds. Through immediate response time, sanitizer and water usage is also greatly reduced.

Centrifugal Separation

Photometric control maximizes quality while reducing losses

Centrifugal separators and decanters provide fast and efficient liquid/solids separation at many stages in the winemaking process from rough separation of raw wine to high-speed ultra-clarification further down stream. Through the success of hundreds of installations worldwide, when installed at three primary points around the centrifugal separator, *optek* In-Line Photometers have proven to greatly improve the performance of the separator, reduce losses and improve centrate consistency.

1 *Separator Feed*

Often the stream being sent to a centrifugal separator or decanter will have a great degree of variability in solids loading especially from sources such as fermenters. By installing an *optek* in-line concentration monitor in the feed stream prior to the separator, greatly improved separation efficiency can be realized. Optimized feed rate to the separator can be controlled based on real-time solids concentration measurement provided by the *optek* photometer. Bowl speed, feed flow, or both can be controlled based on the output from the in-line photometer in a dynamic control loop. For example: at maximum clarity the separator can be fed with full flow, but as the solids concentration increases, the flow can be reduced proportionately or in fixed steps providing optimal separation and throughput time without overloading the centrifugal separator.

2 *Centrate Line*

Monitoring the efficiency of the separation at the outlet (centrate) of the separator is the most common point of installation for process photometers. To protect downstream filtration equipment and optimize separation performance, there are two photometers that can be chosen based on the clarification level achieved by the separator. To monitor extremely low concentrations of solids on super-clarifiers, *optek* scattered-light turbidity monitors are most suitable and *optek* in-line concentration monitors are used for percent-level concentrations.

Pay-Back: This measurement is not only extremely useful in monitoring the performance of the separator but when used to initiate partial or full bowl-shoots for de-sludge based on solids concentration rather than on a timed function, an impressive return on investment can be realized. In many cases an *optek* in-line photometer used in this location pays for itself in a matter of months by initiating desludge based only at the precise moment excessive carryover of solids to the centrate is detected. This avoids desludging too often, which only sends valuable product down the drain, increases mechanical stress and wear, and avoid unacceptable solids carryover in the centrate stream, which could blind a downstream filter or completely block the pores of a microfiltration system crippling production.

3 *Concentrate*

When it is desirable to measure reclaim yeast or solids at the concentrate stream of the separator, *optek* in-line NIR absorption photometers equipped with a very short optical path length (to 1 mm) will accurately correlate absorption measurements directly to weight-percent to measure yields and control product quality.

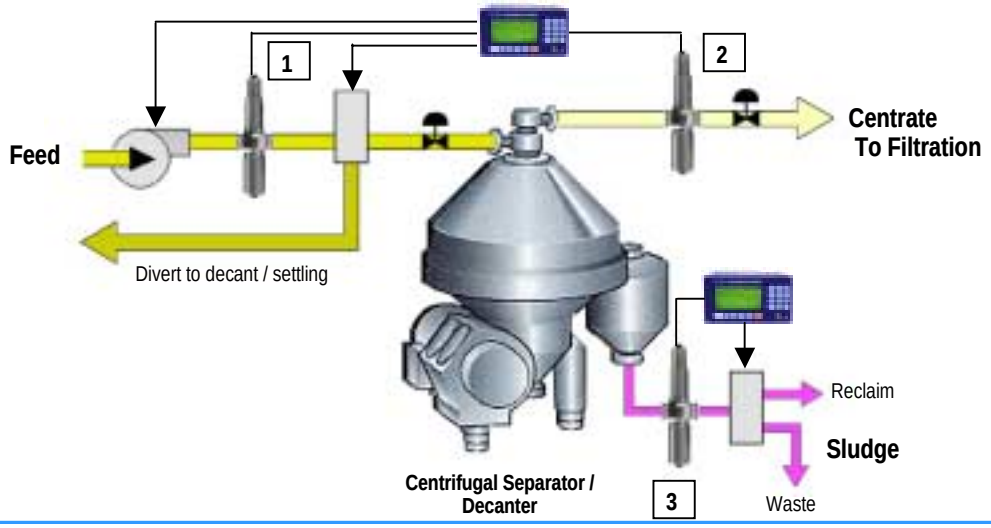

Wine Filtration

Standardize quality and optimize filter performance

1 *Precise Filtrate Monitoring - In-Line real time quality assurance*

Many different types of filtration systems are used in wine processing and play a vital role in the final finish and quality of each wine processed. To optimize any filtration process, *optek* provides in-line scattered-light turbidimeters to precisely monitor extremely low concentrations of suspended solids (PPM, FTU, NTU, EBC) to ensure that proper purity is achieved before transferring the product to the next process stage. By implementing an *optek* turbidimeter on the filtrate stream, the filtrate can be automatically diverted to recirculate until the product clarity is improved to an acceptable level. This ensures optimized product quality and improved filtration performance while greatly reducing lab analyses, visual inspection and potential problems downstream. These precise and reliable scattered-light turbidimeters not only measure solids, but also colloidal constituents in sizes and concentrations not detectable by the human eye all of which may affect the finish and stability of the final product. *optek* in-line scattered-light turbidimeters have proven to be an excellent tool for vintners to maximize quality assurance and product uniformity.

2 *Optimizing Precoat and Body Feed Control*

Often many large-scale pressure leaf filtration systems implement *optek* in-line turbidimeters to optimize diatomaceous earth (DE) dosing to ensure uniform precoat and controlled body feed. By continuously monitoring and controlling filter aid addition, the filter cake uniformity is greatly improved therefore optimizing the precoat cycle and maximizing the use of filter aids while extending filter runs. In addition, because *optek* in-line turbidimeters measure total solids in real time, DE body feed can be precisely controlled by need rather than flow rate.

3 *Feed Monitoring - Prevents Filter Blinding*

An *optek* NIR absorption-based turbidimeter installed at the inlet to the filter can precisely monitor the filter feed quality and indicate when the incoming turbidity level is in danger of “blinding” the filter. This “blinding” can be caused by heavy solids carryover from storage tanks or pre-filtration failure. Upon reaching the user-defined high turbidity threshold, the filter can be switched to a recycle mode, incoming product diverted to a decant tank, centrifugal separator or post filtered addition can be increased to reliably prevent filter blinding and extend the filter run.

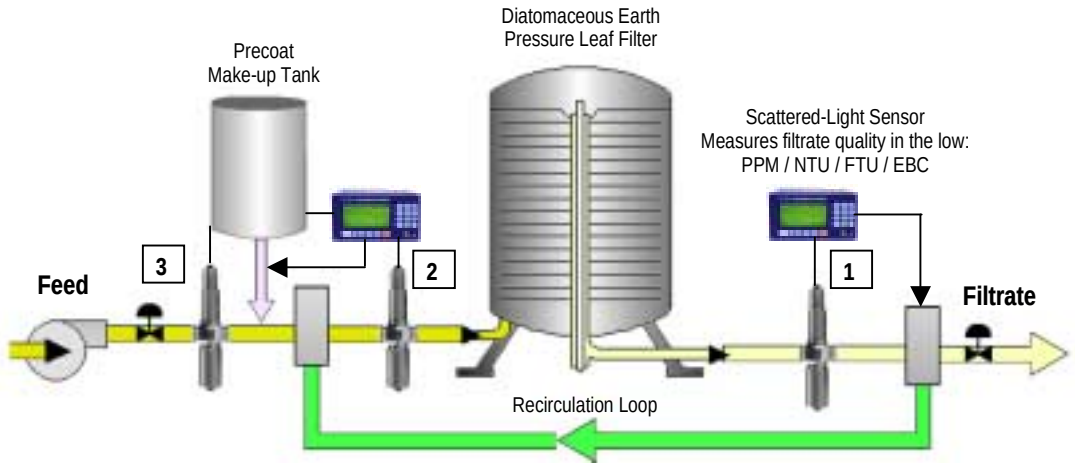

Benefits:

- *For all types of rough and polishing filters: PAD, DE, Plate*
- *Extend filter runs through automation*
- *Improve filter performance*
- *Optimize use of filter aids*
- *Measure product quality precisely and continuously*
- *Monitors trace solids and colloids in final filtrate*
- *Scattered-light measures constituents in sizes below 0.2 micron*

Automatic Yeast Pitching

Optimize primary and secondary pitching

For the determination of the correct pitching rate, two methods have been established which have been commonly used in the brewing industry.

1. The control of the pitching rate is realized through a differential measurement between two turbidity measurement systems in the piping always before and after the yeast dosage.

2. The control of the pitching rate is executed volumetrically; this means the concentration of the yeast in the yeast dosing piping is realized by means of a turbidity measurement.

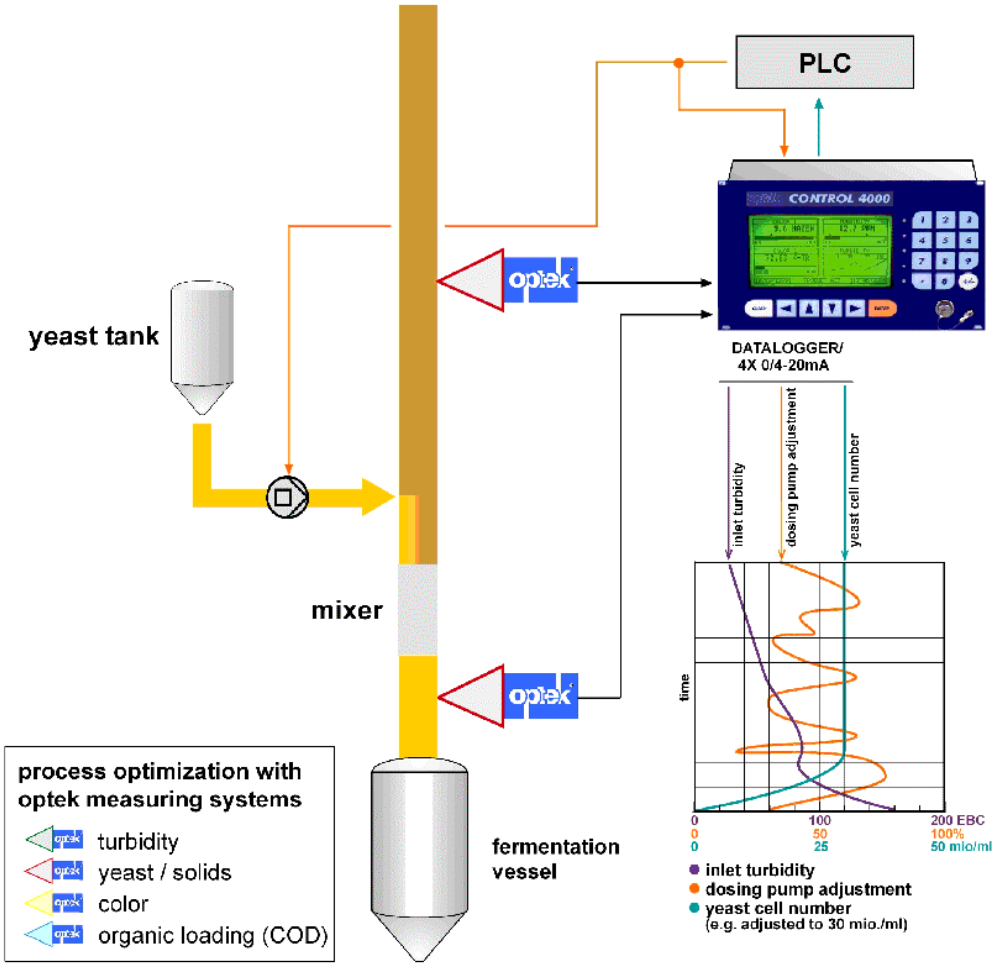

Headquarters
optek-Danulat GmbH
Emscherbruchallee 2
Essen 45356, Germany
Ph: ++49-(0)201-63409-0
Fx: ++49-(0)201-63409-999
E-mail: info@optek.de

North America
optek - Danulat, Inc.
Germantown Technology Park
N118 W18748 Bunsen Drive
Germantown WI 53022
United States
Phone: 800-371-4288
Ph: 262-437-3600
Fx: 262-437-3699
E-Mail: info@optek.com

The Netherlands
Technical Adviesbureau
Staalweg 16
Culemborg NL-4104 AT
Netherlands
Ph: (31) 0345-650-301
Fx: (31) 0345-650-361
E-Mail: info@optek.nl

RAPID RESPONSE FORM

Fax to: 262-437-3699

From: _____ Phone: _____
Company: _____ Fax: _____
Address: _____ E-mail: _____
City: _____ State: _____ ZIP: _____

I have interest in these general application areas for *optek* in-line photometry:

- ❑ Turbidity and Solids Measurements.
- ❑ In-line Concentration Measurements.
- ❑ Precision Color Measurements.
- ❑ Process UV Absorption Measurements.

I have interest in these specific applications for *optek* in-line photometry:

- ❑ Filtration Process Optimization - Diatomaceous Earth, Membrane, RO, others.
- ❑ Centrifugal Separation Process Optimization.
- ❑ Product / Water - Product / Product Interface Monitoring.
- ❑ Water and Waste Water Analyzers.
- ❑ Trace Contamination Detection in Water or Condensate Streams.
- ❑ Product Recovery & Loss Reduction.
- ❑ In-Line Quality Assurance Analysis.
- ❑ Yellowness / Color Scales: APHA (Hazen), ASTM, Gardner, Lovibond, Saybolt, others.
- ❑ Chlorine and/or Hypochlorite in Liquid or Gaseous Process Streams.
- ❑ Extracts and Essence Dosing Control.
- ❑ Precise Product Color and Clarity Monitoring.
- ❑ Municipal Water / Effluent Quality (TOC).
- ❑ CIP Return Monitoring for: BOD & TOC, Chlorine Dioxide Concentration or other Disinfectants.
- ❑ Other: _____

This associate may be interested in learning about *optek* in-line photometry:

Name: _____ Phone: _____
Title: _____ E-mail: _____

Other Products or Services you would like to see from *optek*:

_____

_____

- ❑ Please have an Application Engineer contact me to discuss application in my plant.
- ❑ Please contact me to schedule a plant visit.
- ❑ Please remove me from your mailing list.

We appreciate your feedback!